TOWER AUTOMOTIVE
06-06-16-13-37-52/06-06-16-13-49-58
Part # 32721
BRKT RR JOUNCE BUMPER

Variable Set: T-VALUE 12 Samples
Part: Job # 32721
Status: Run Chart
Date: 07-12-03-08-55-35

B-1.T		
	Nom	0.00
	+Tol	1.50
	-Tol	-1.50
O	Mean	O 0.36
	AveDev	O 0.36
	Range	0.31
I	Pp	5.77
	Ppk	4.40

C-3.T		
	Nom	0.00
	+Tol	0.30
	-Tol	-0.30
H	Mean	H 0.19
	AveDev	H 0.19
	Range	0.51
L	Pp	0.73
	Ppk	0.26

SPT_3.T		
	Nom	0.00
	+Tol	0.50
	-Tol	-0.50
O	Mean	O 0.04
	AveDev	O 0.04
	Range	0.06
I	Pp	8.67
	Ppk	7.93

C-2.T		
	Nom	0.00
	+Tol	0.30
	-Tol	-0.30
O	Mean	O 0.28
	AveDev	O 0.28
	Range	0.21
I	Pp	1.68
	Ppk	0.12

SPT_4.T		
	Nom	0.00
	+Tol	0.50
	-Tol	-0.50
O	Mean	O 0.02
	AveDev	O 0.02
	Range	0.09
I	Pp	6.25
	Ppk	6.02

D-1.T		
	Nom	0.00
	+Tol	0.40
	-Tol	-0.40
I	Mean	O -0.26
	AveDev	O 0.26
	Range	0.07
O	Pp	7.28
	Ppk	2.49

A-1.T		
	Nom	0.00
	+Tol	0.50
	-Tol	-0.50
L	Mean	H -0.08
	AveDev	H 0.08
	Range	0.12
H	Pp	5.71
	Ppk	4.76

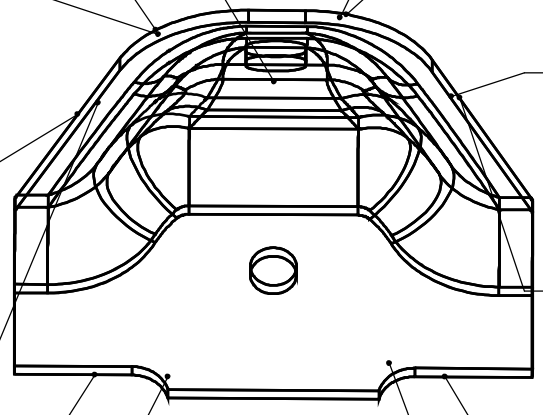

SPT_2.T		
	Nom	0.00
	+Tol	0.50
	-Tol	-0.50
O	Mean	O 0.04
	AveDev	O 0.04
	Range	0.05
I	Pp	10.61
	Ppk	9.80

C-4.T		
	Nom	0.00
	+Tol	0.30
	-Tol	-0.30
H	Mean	H 0.35
	AveDev	H 0.35
	Range	0.30
L	Pp	1.33
	Ppk	-0.21

SPT_1.T		
	Nom	0.00
	+Tol	0.50
	-Tol	-0.50
O	Mean	I -0.11
	AveDev	I 0.11
	Range	0.20
I	Pp	3.27
	Ppk	2.53

C-1.T		
	Nom	0.00
	+Tol	0.30
	-Tol	-0.30
O	Mean	O 0.25
	AveDev	O 0.25
	Range	0.16
I	Pp	2.26
	Ppk	0.41

EPT_1.T		
	Nom	0.00
	+Tol	0.40
	-Tol	-0.40
I	Mean	O -0.22
	AveDev	O 0.22
	Range	0.20
O	Pp	2.47
	Ppk	1.14

A-2.T		
	Nom	0.00
	+Tol	0.50
	-Tol	-0.50
L	Mean	H -0.13
	AveDev	H 0.13
	Range	0.07
H	Pp	8.64
	Ppk	6.32

Feature Locations